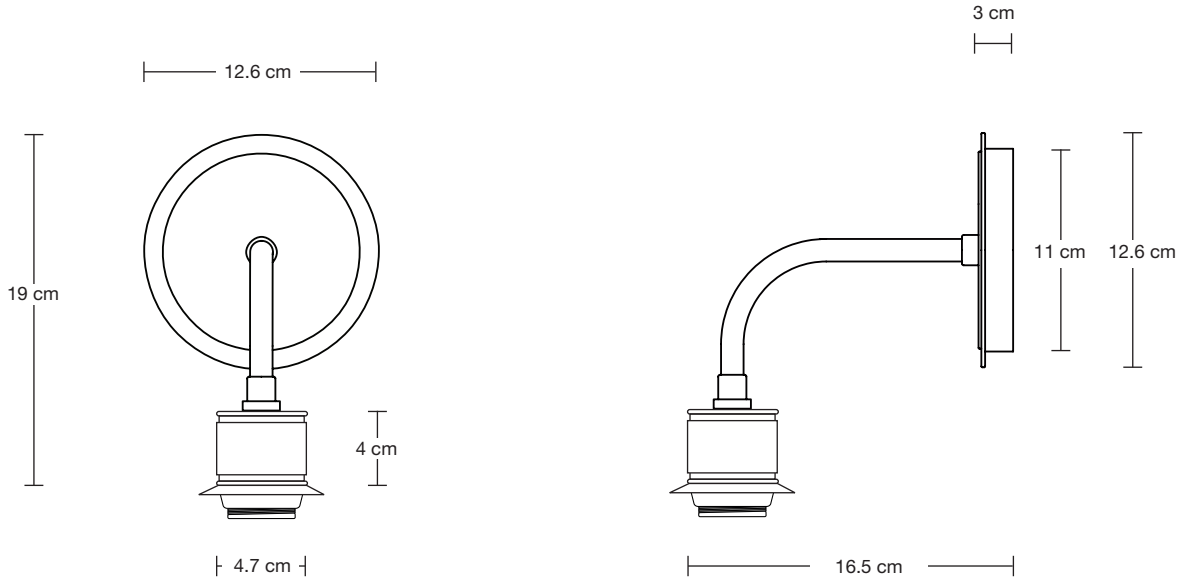

Albany Wall Holder - Single

SPECIFICATIONS	INFORMATION	DIMENSIONS
We meet all UK and EU lighting and safety regulations.	PRODUCT CODE: AL-WL-S	H: 19 cm x W: 13 cm x D: 16.5 cm
Our products are hand finished to ensure an authentic vintage look and therefore the may vary slightly from those shown in the images.	FINISHES: Bronze, Brass.	HOLDER WIDTH: 13 cm / 5.1”
Bulb Required: Standard screw (E27) fitting, max 40W.	Ready to be installed, installation required.	HOLDER HEIGHT: 19 cm / 7.4”
WEIGHT: 0.7 kg	Wall mount screws not included.	ROSE DIAMETER: 13 cm / 5.1”
		ROSE HEIGHT: 3 cm / 1.2”