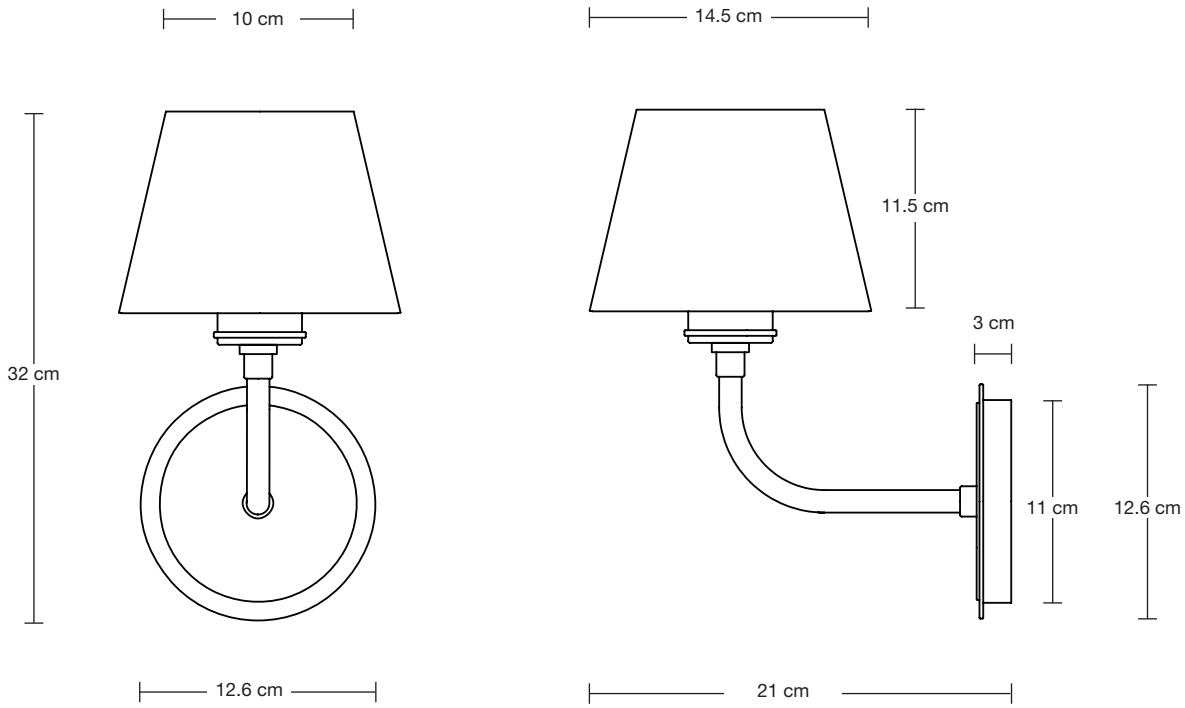

Albany Wall Light - Single

SPECIFICATIONS	INFORMATION	DIMENSIONS
We meet all UK and EU lighting and safety regulations.	PRODUCT CODE: AL-WL-S-BZ-EM-S-NC-GB | AL-WL-S-BZ-EM-S-NC-GB	H: 32 cm x W: 14.5 cm x D: 21 cm
Our products are hand finished to ensure an authentic vintage look and therefore the may vary slightly from those shown in the images.	FINISHES: Bronze, Brass.	HOLDER DIAMETER: 13 cm / 5.1”
Bulb Required: Standard screw (E27) fitting, max 40W.	SHADE: Empire.	HOLDER HEIGHT: 21 cm / 8.3”
WEIGHT: 0.854 kg	SHADE FINISHES: Natural Cotton.	SHADE DIAMETER: 14.5 cm / 5.7”
	Ready to be installed, installation required.	SHADE HEIGHT: 11.5 cm / 4.5”
	Wall mount screws not included.	ROSE DIAMETER: 13 cm / 5.1”
		ROSE HEIGHT: 3 cm / 1.2”